FORD / MAZDA

Aluminium Liner
Installation Instructions

Mountain Top®
INDUSTRIES APS

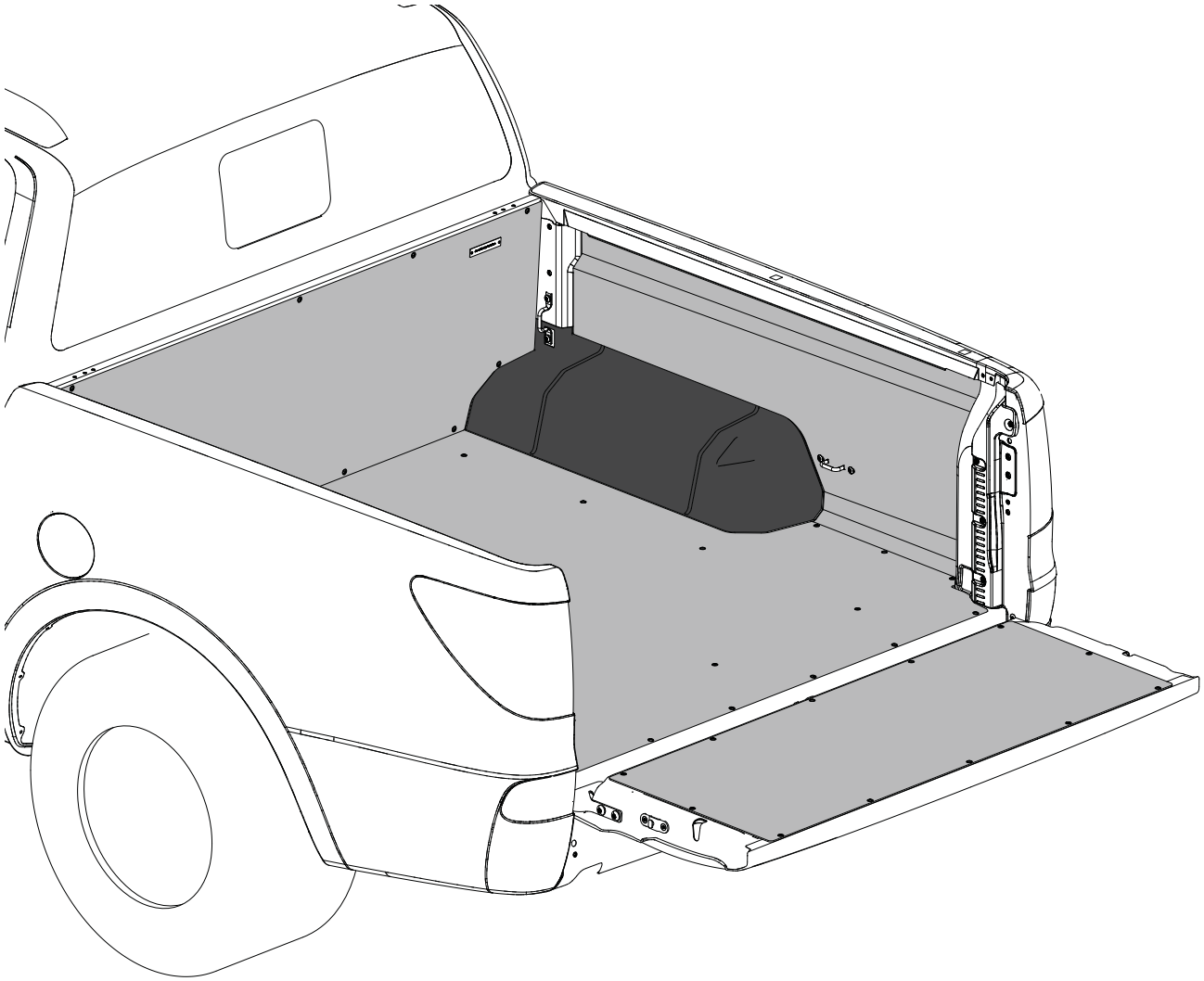

Model Year:	2012 →
Part Number:	AL FO90 A01 Double cab
Weight:	26 kg
Installation Time:	1 hr

Pedersholmparken 10 3600 Frederikssund Denmark ph: +45 4810 2950 Fax +45 4810 2960 www.mountaintop.dk

© Copyright, Mountain Top Industries ApS

FORD / MAZDA

Aluminium Liner
Installation Instructions

Mountain Top®
INDUSTRIES APS

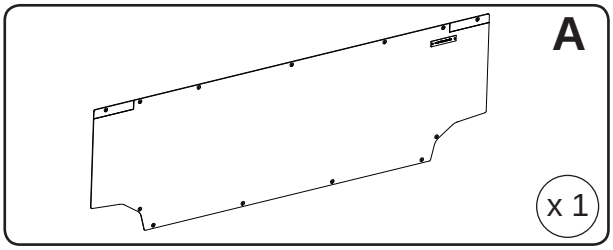

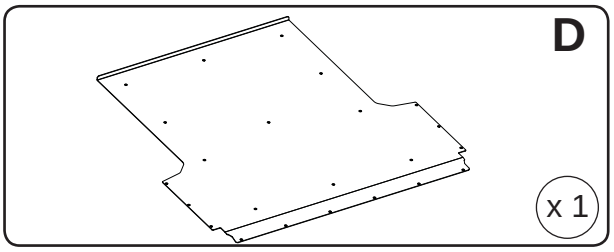

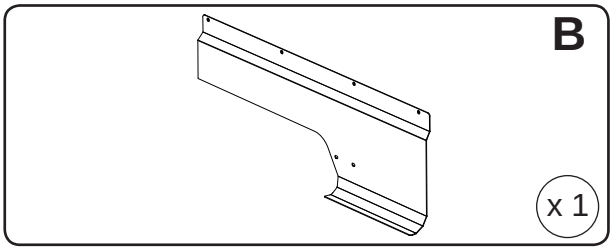

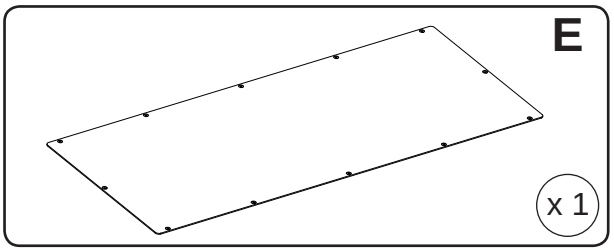

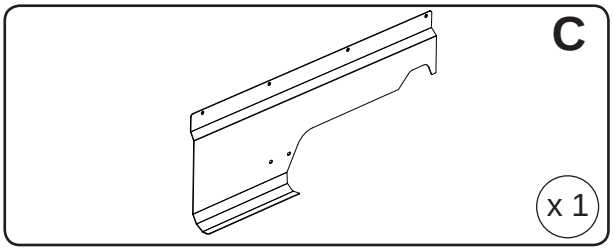

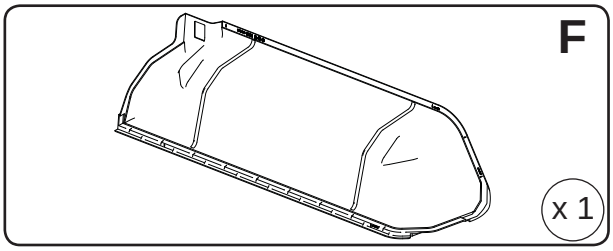

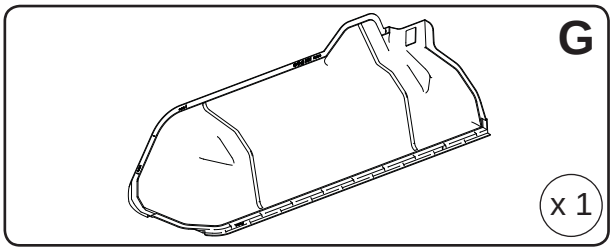

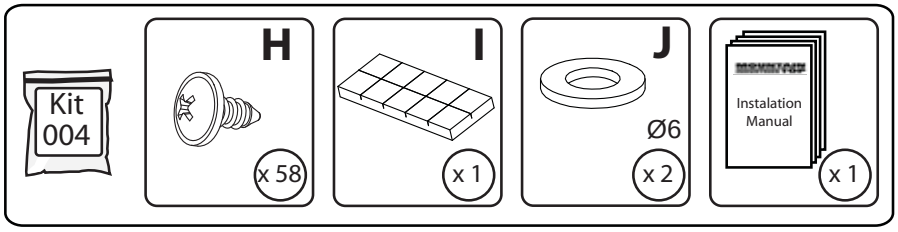

MTI-number	Issue	Date	AL FO90 A01	Page
870 006	01	22/03/2012		2 /10

Pedersholmparken 10 3600 Frederikssund Denmark ph: +45 4810 2950 Fax +45 4810 2960 www.mountaintop.dk

© Copyright, Mountain Top Industries ApS

FORD / MAZDA

Aluminium Liner
Installation Instructions

Mountain Top®
INDUSTRIES APS

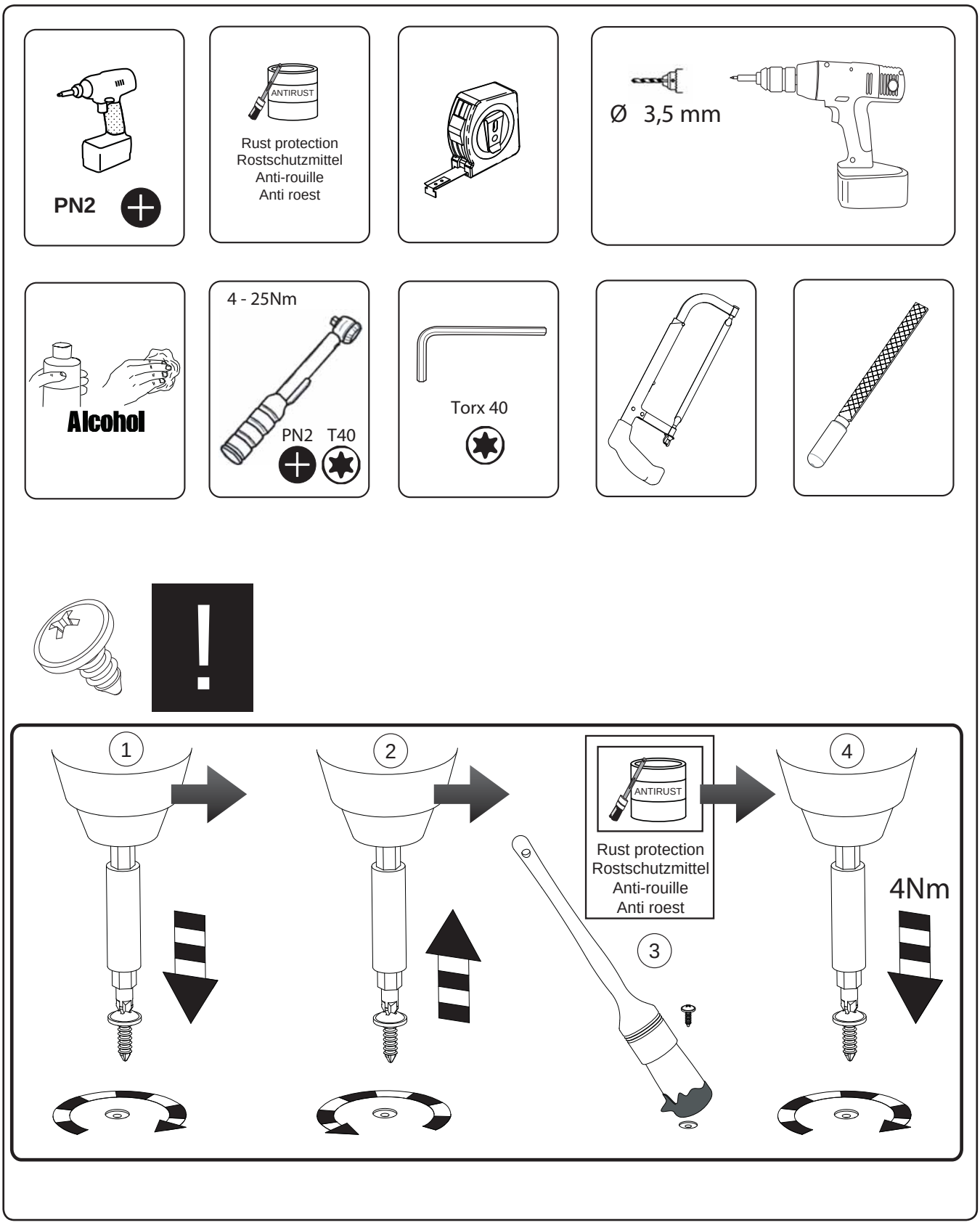

MTI-number	Issue	Date		Page
870 006	01	22/03/2012	AL FO90 A01	3 /10

Pedersholmparken 10 3600 Frederikssund Denmark ph: +45 4810 2950 Fax +45 4810 2960 www.mountaintop.dk

© Copyright, Mountain Top Industries ApS

FORD / MAZDA

Aluminium Liner
Installation Instructions

Mountain Top®
INDUSTRIES APS

1.1

L & R

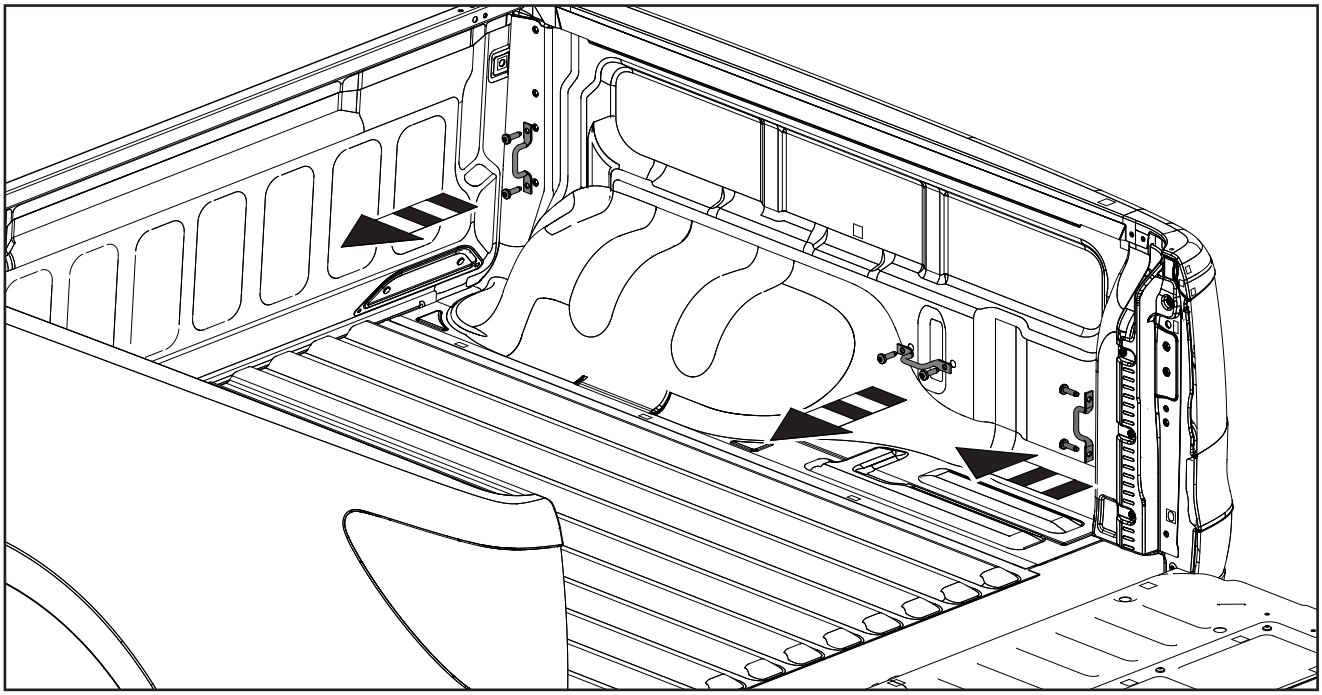

1.2

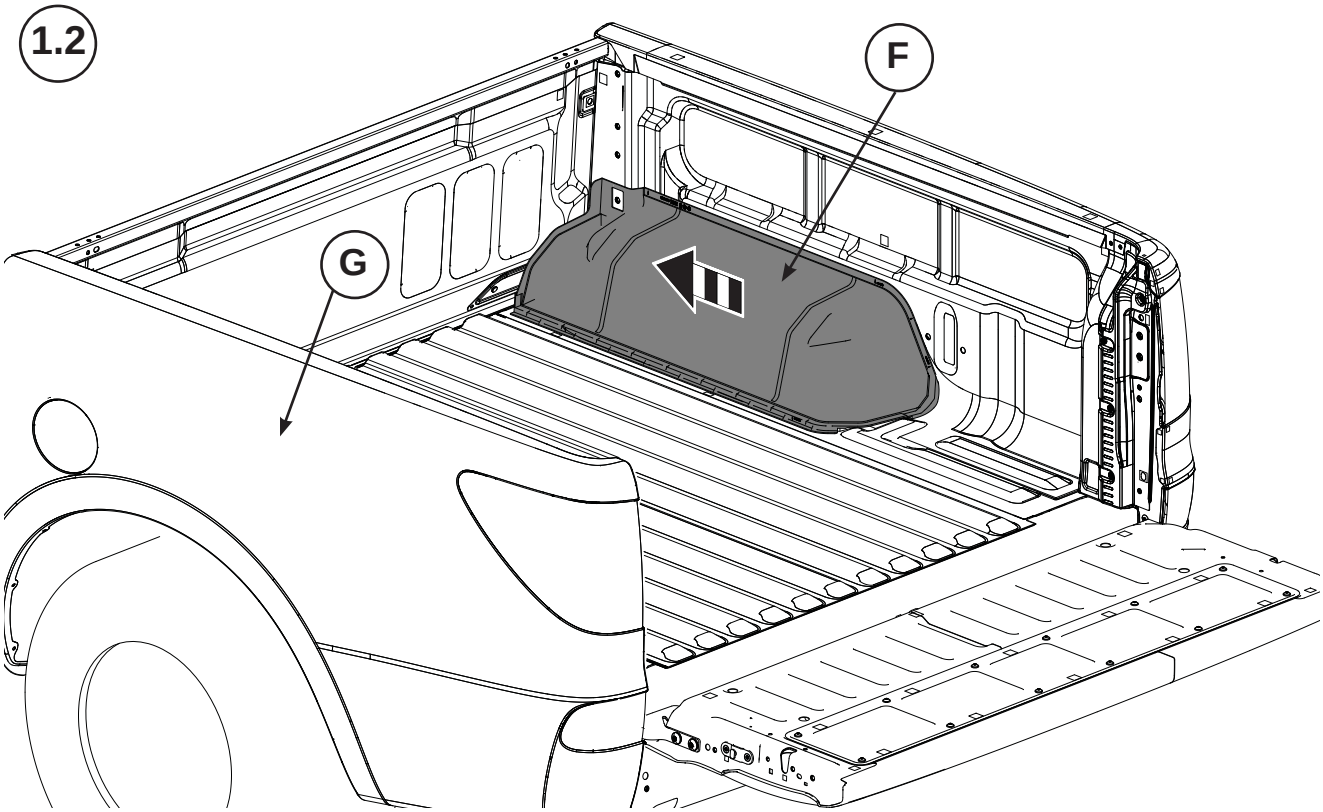

Pedersholmparken 10 3600 Frederikssund Denmark ph: +45 4810 2950 Fax +45 4810 2960 www.mountaintop.dk

© Copyright, Mountain Top Industries ApS

FORD / MAZDA

Aluminium Liner
Installation Instructions

Mountain Top®
INDUSTRIES APS

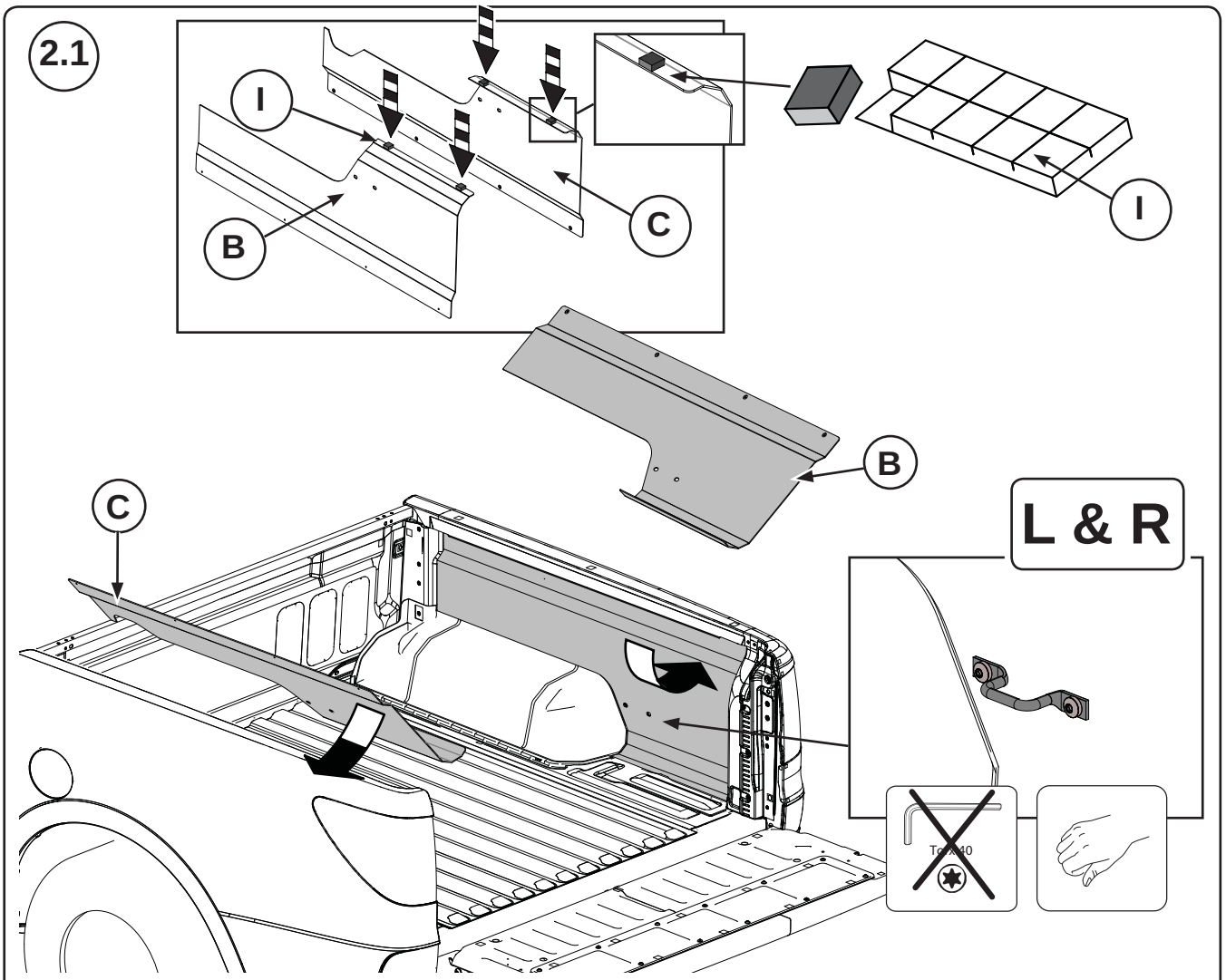

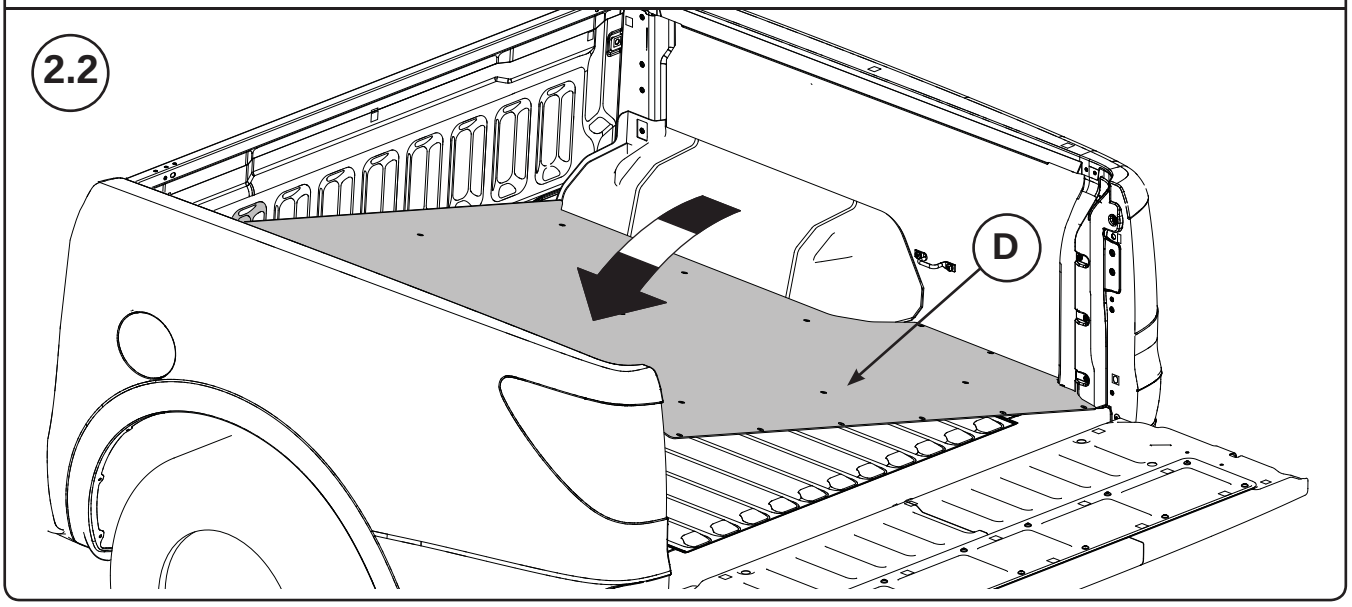

MTI-number	Issue	Date	AL FO90 A01	Page
870 006	01	22/03/2012		5 /10

Pedersholmparken 10 3600 Frederikssund Denmark ph: +45 4810 2950 Fax +45 4810 2960 www.mountaintop.dk

© Copyright, Mountain Top Industries ApS

FORD / MAZDA

Aluminium Liner
Installation Instructions

Mountain Top®
INDUSTRIES APS

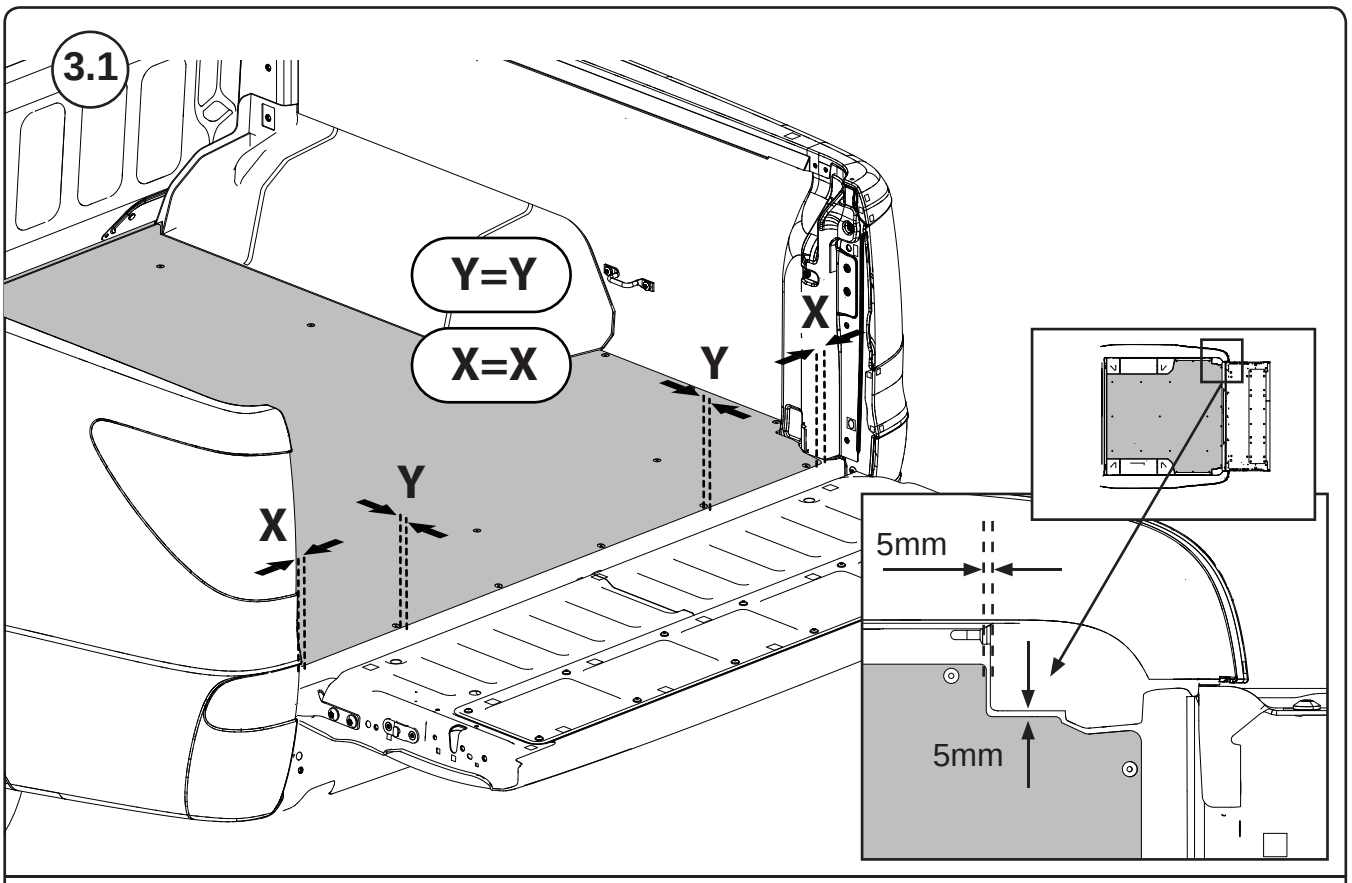

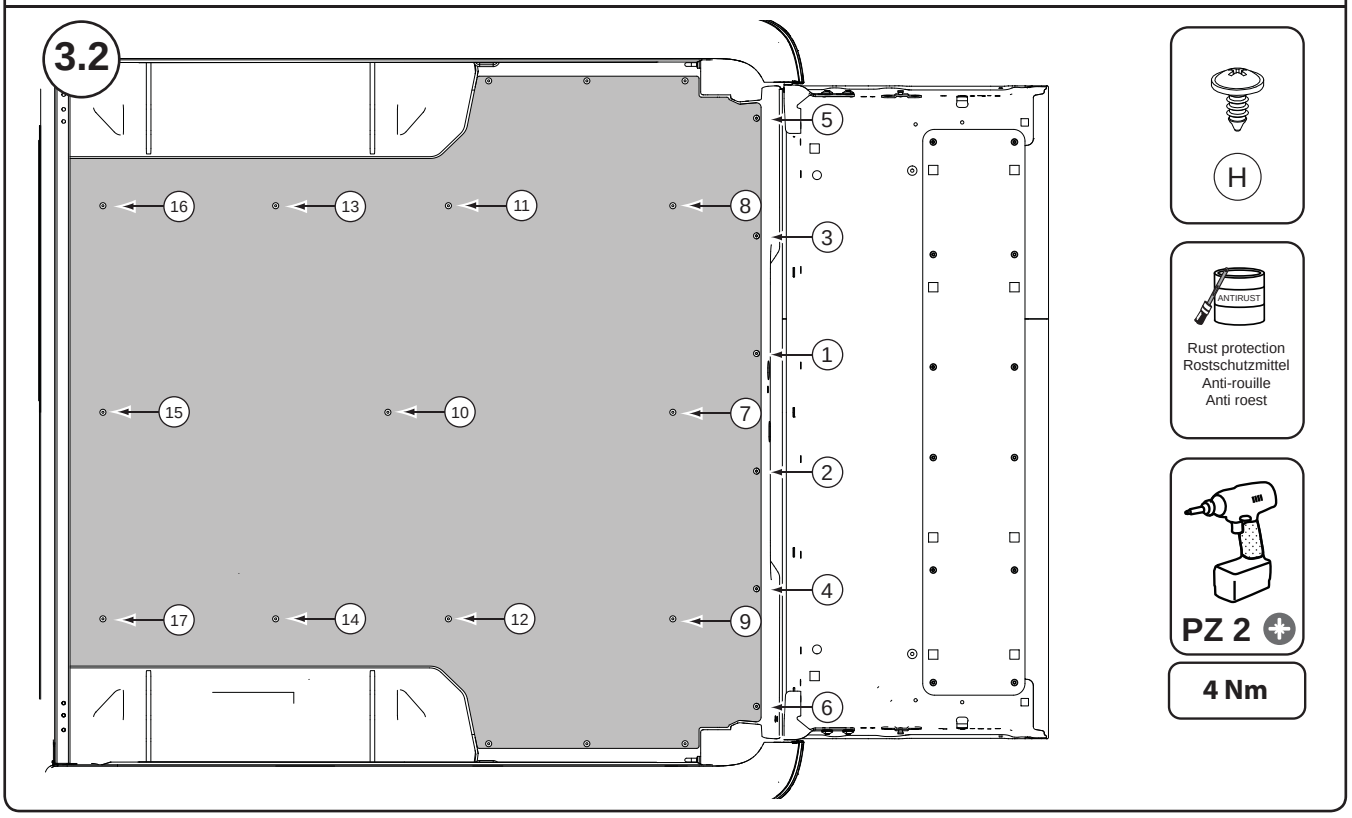

MTI-number	Issue	Date	AL FO90 A01	Page
870 006	01	22/03/2012		6 /10

Pedersholmparken 10 3600 Frederikssund Denmark ph: +45 4810 2950 Fax +45 4810 2960 www.mountaintop.dk

© Copyright, Mountain Top Industries ApS

FORD / MAZDA

Aluminium Liner
Installation Instructions

Mountain Top®
INDUSTRIES APS

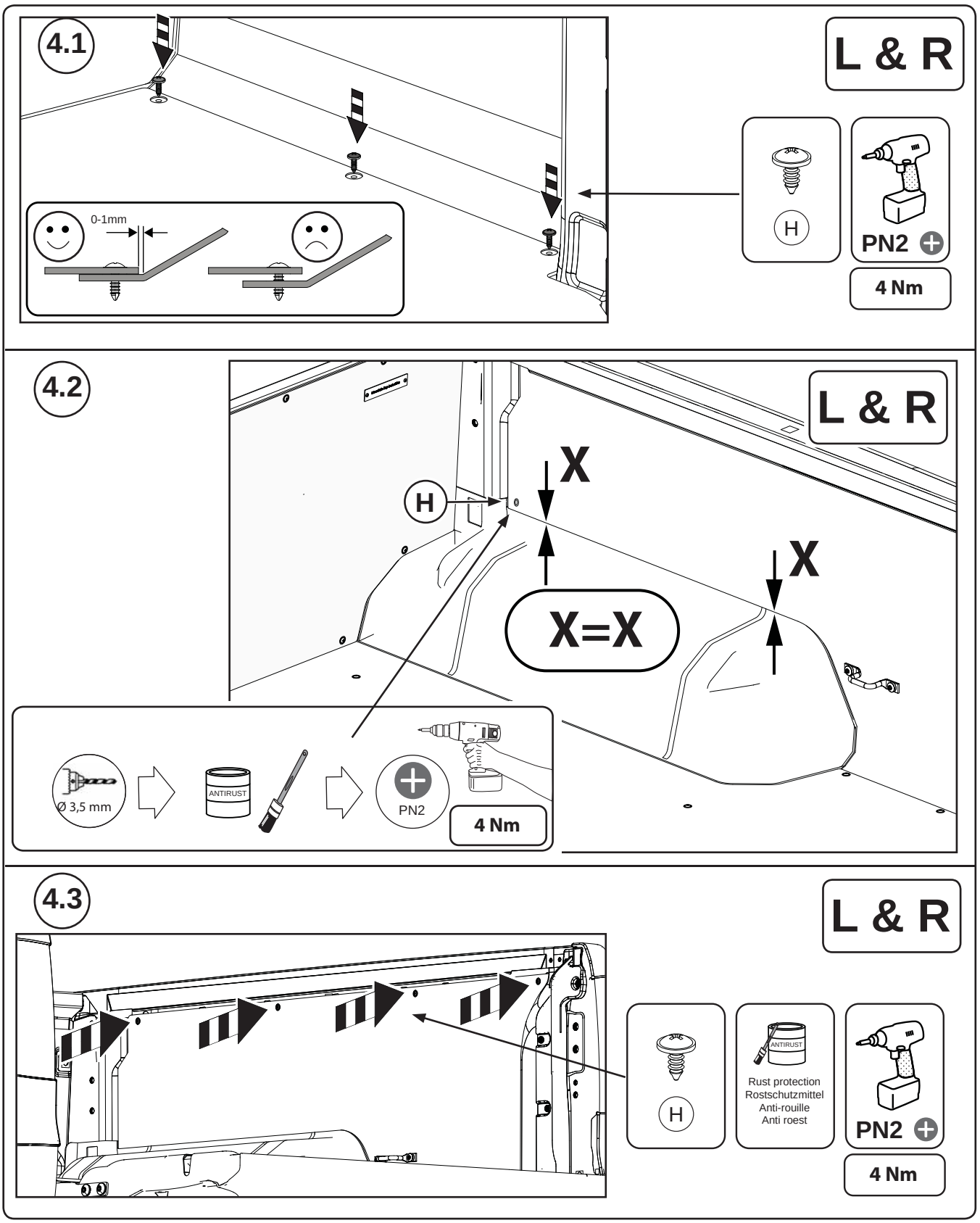

MTI-number	Issue	Date	AL FO90 A01	Page
870 006	01	22/03/2012		7 /10

Pedersholmparken 10 3600 Frederikssund Denmark ph: +45 4810 2950 Fax +45 4810 2960 www.mountaintop.dk

© Copyright, Mountain Top Industries ApS

FORD / MAZDA

Aluminium Liner
Installation Instructions

Mountain Top®
INDUSTRIES APS

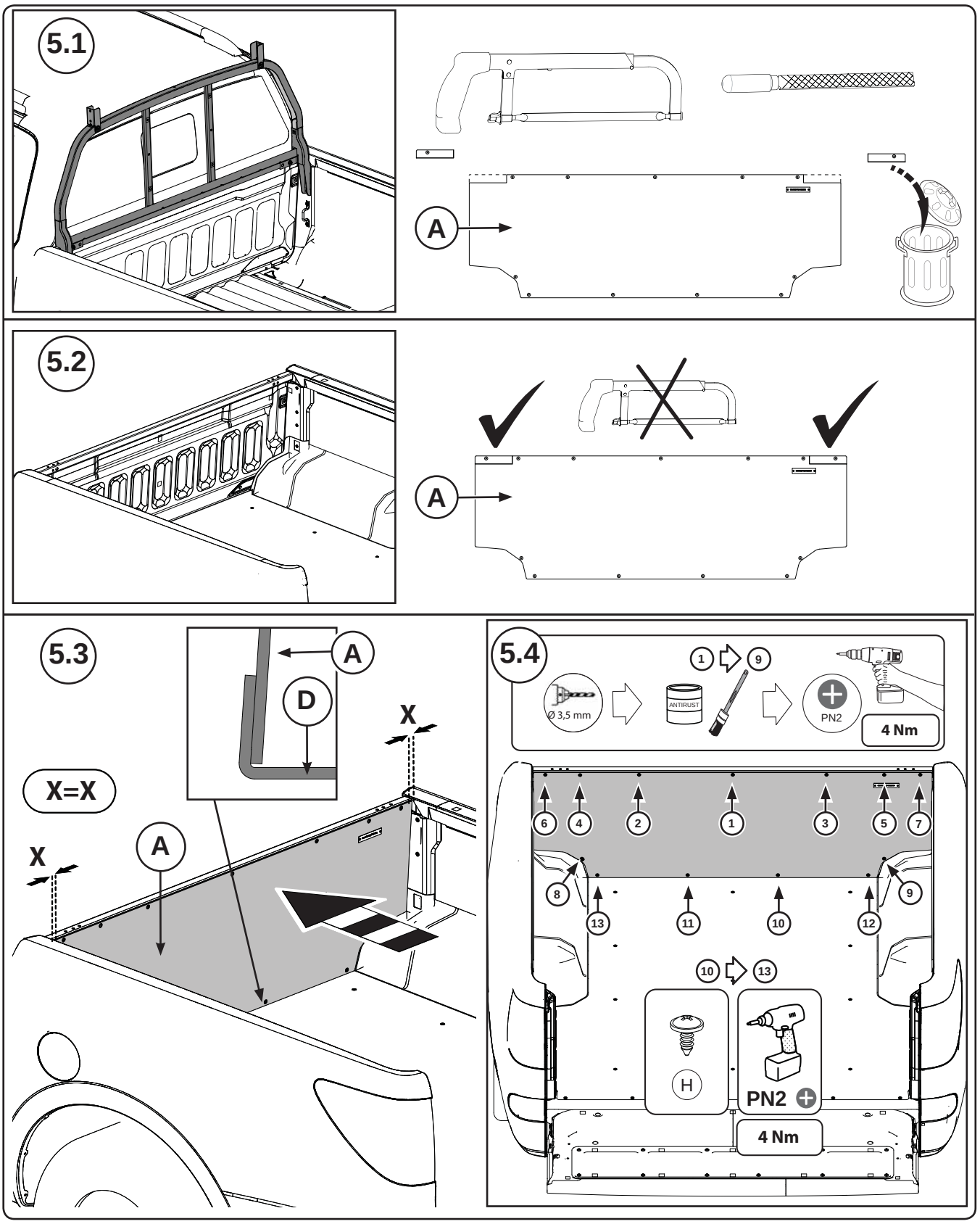

MTI-number	Issue	Date	AL FO90 A01	Page
870 006	01	22/03/2012		8 /10

Pedersholmparken 10 3600 Frederikssund Denmark ph: +45 4810 2950 Fax +45 4810 2960 www.mountaintop.dk

© Copyright, Mountain Top Industries ApS

FORD / MAZDA

Aluminium Liner
Installation Instructions

Mountain Top®
INDUSTRIES APS

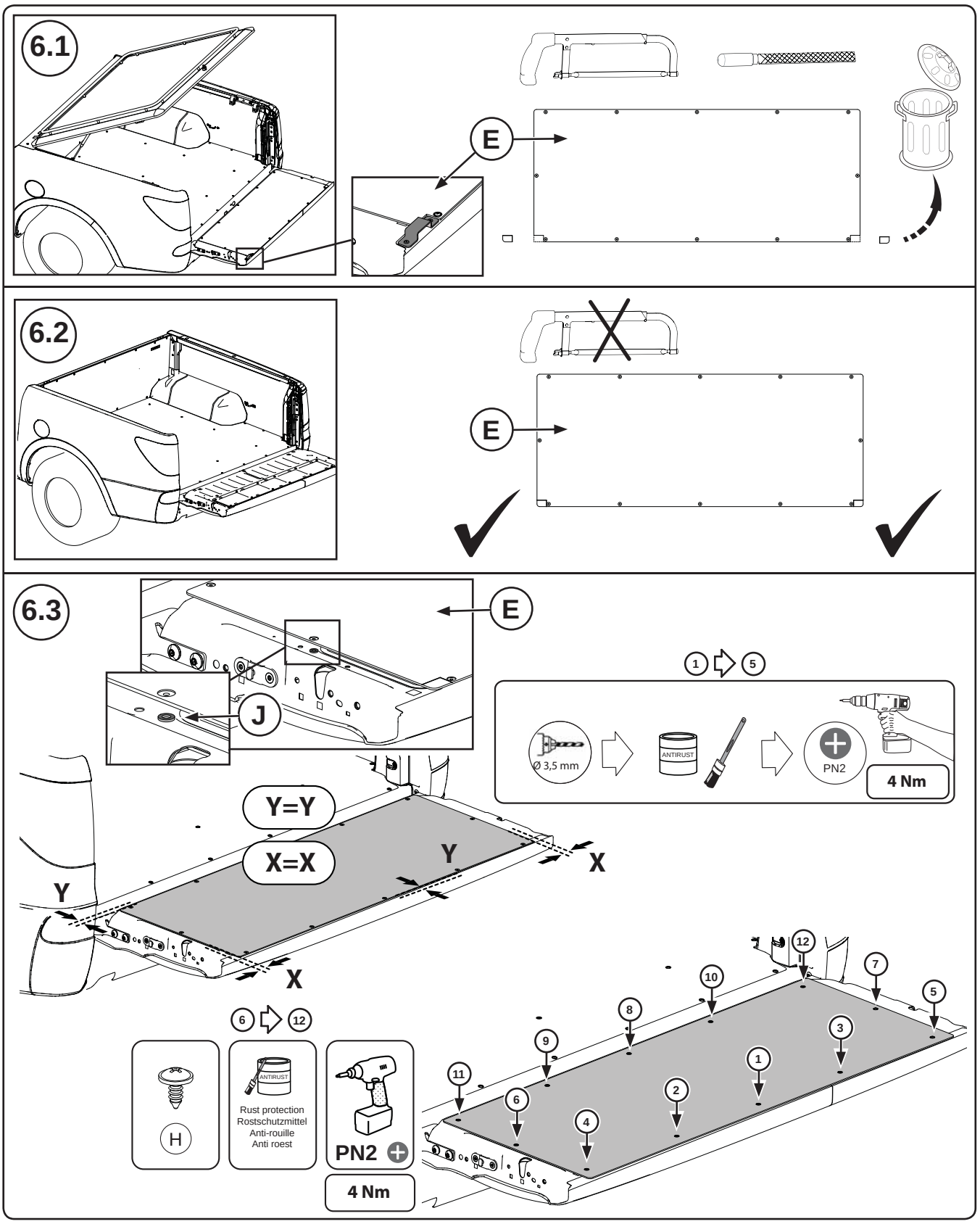

Pedersholmparken 10 3600 Frederikssund Denmark ph: +45 4810 2950 Fax +45 4810 2960 www.mountaintop.dk

© Copyright, Mountain Top Industries ApS

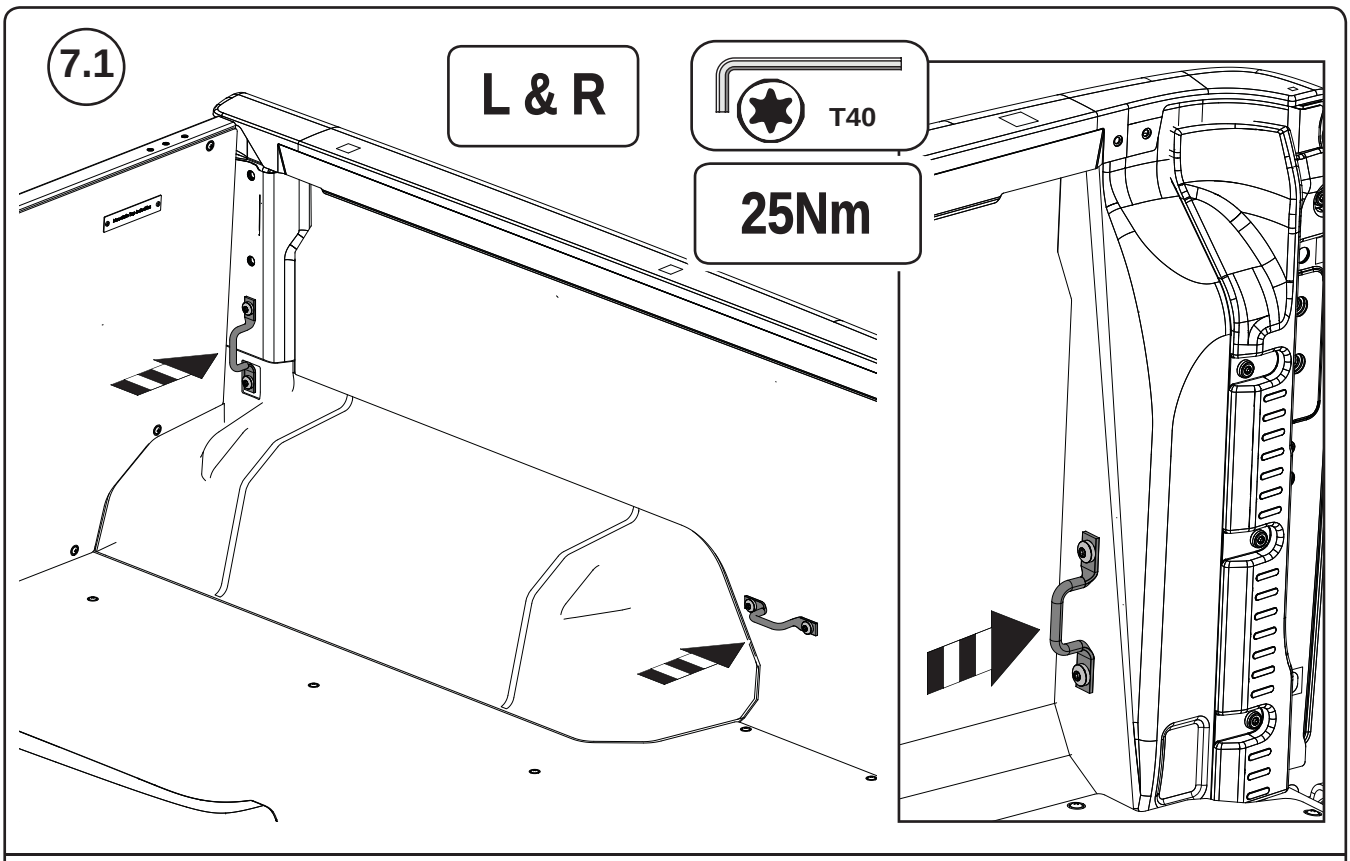

Pedersholmparken 10 3600 Frederikssund Denmark ph: +45 4810 2950 Fax +45 4810 2960 www.mountaintop.dk

© Copyright, Mountain Top Industries ApS